Linkit Kim/SMD

linkit-v4

Low-power wildlife telemetry platform designed for long-term field deployment.
This variant integrates the SMD Argos module, optimized power management (wireless charging, solar input, and USB/Li-ion handling), and a compact architecture prioritizing energy efficiency, cost, and reliability. All interfaces and components are arranged to ensure seamless compatibility with the Linkit firmware ecosystem and Arribada's open-source tooling.

Table of contents

Sheet 1: Project overview (this page)

Sheet 2: linkit-v4

Sheet 3: pwr

Sheet 4: BQ51003YFPT_WirelessCharger_2.5W (devicesheet)
Sheet 5: TPS63901_BuckBoost_lowIq_3V32V3_400mA (devicesheet)

Sheet 6: mcu

Sheet 7: sensors
Sheet 8: BMA400_ACC_LinkitV3 (devicesheet)
Sheet 9: SAM-M10Q (devicesheet)

Sheet 10: interface

Sheet 11: satellite
Sheet 12: sat-smd

U_linkit-v4
linkit-v4.SchDoc

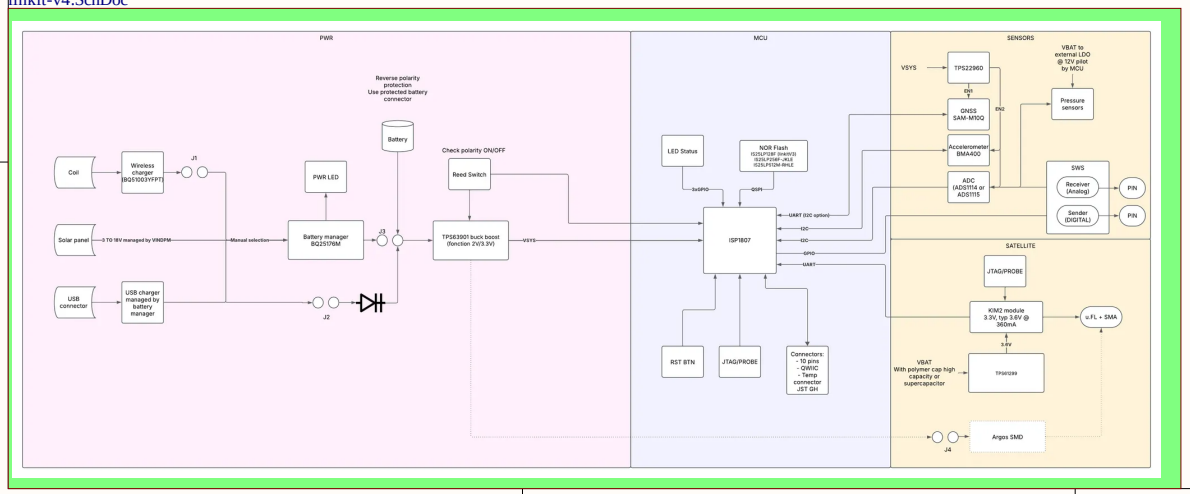

Legend

General comment such as function title, configuration, ...

Text to be added to silkscreen.

Warning text.

Notes to generate the board layout.

License

Title	*Linkit Kim/SMD*		*Arribada Initiative* *https://github.com/arribada* *contact@arribada.org* *arribada.org* *UK - Portsmouth*
Size: A4	Reference: linkit-v4	Revision: 1 0	
Date: 26/11/2025	Time: 10:21:09	Sheet 1 of 12	
File: C:\Users\fourn\Altium\AD25\Projects\Arribada\linkit-v4-hw\Project_Overview.SchDoc			

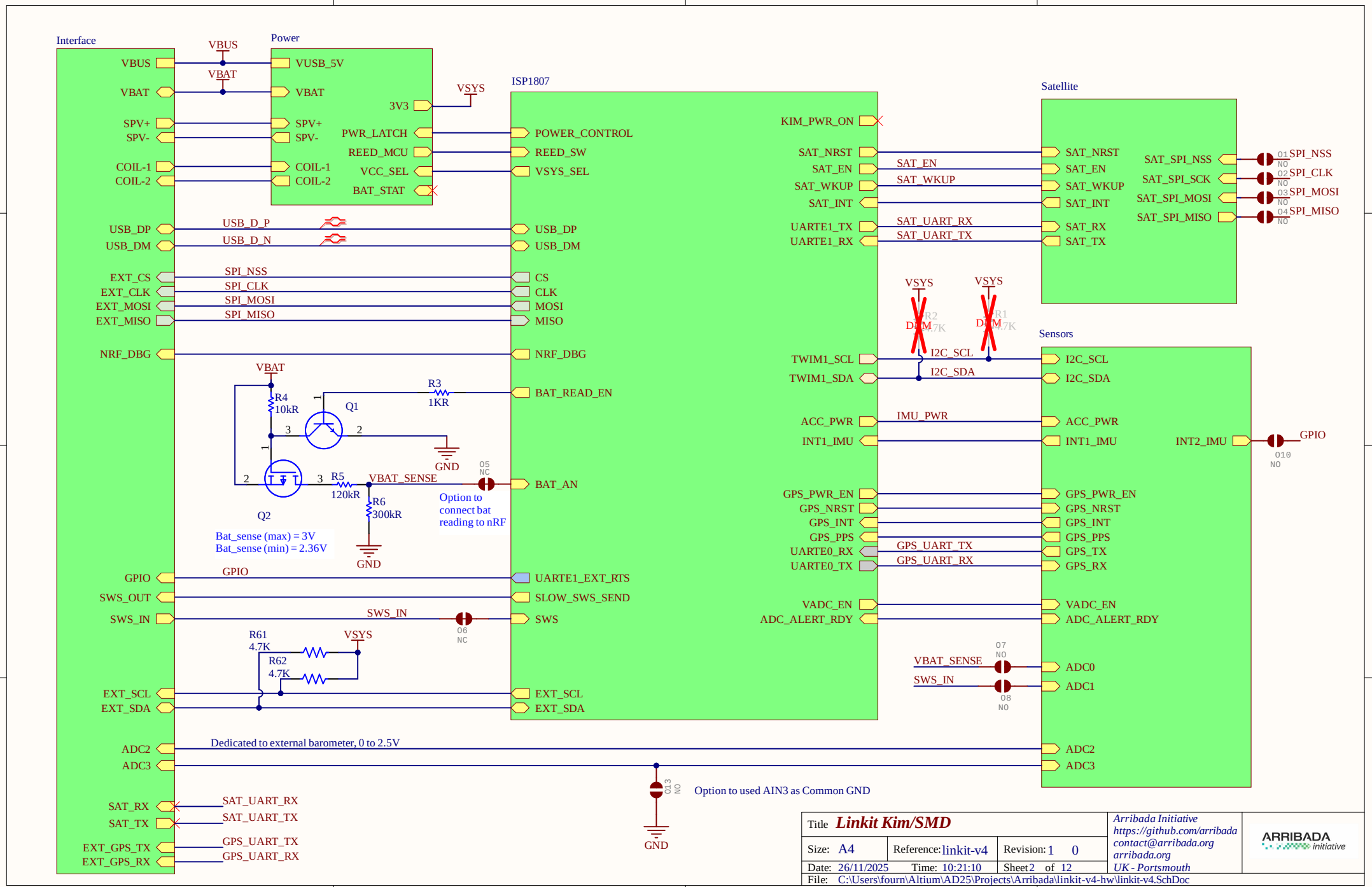
Interface
VBUS
VBAT
SPV+
SPV-
COIL-1
COIL-2
USB_DP
USB_DM
EXT_CS
EXT_CLK
EXT_MOSI
EXT_MISO
NRF_DBG
GPIO
SWS_OUT
SWS_IN
EXT_SCL
EXT_SDA
ADC2
ADC3
SAT_RX
SAT_TX
EXT_GPS_TX
EXT_GPS_RX
Power
VUSB_5V
3V3
PWR_LATCH
REED_MCU
VCC_SEL
BAT_STAT
VSYS
ISP1807
POWER_CONTROL
REED_SW
VSYS_SEL
CS
CLK
MOSI
MISO
BAT_READ_EN
BAT_AN
UARTE1_EXT_RTS
SLOW_SWS_SEND
SWS
KIM_PWR_ON
SAT_NRST
SAT_EN
SAT_WKUP
SAT_INT
UARTE1_TX
UARTE1_RX
TWIM1_SCL
TWIM1_SDA
ACC_PWR
INT1_IMU
GPS_PWR_EN
GPS_NRST
GPS_INT
GPS_PPS
UARTE0_RX
UARTE0_TX
VADC_EN
ADC_ALERT_RDY
Satellite
SAT_SPI_NSS
SAT_SPI_SCK
SAT_SPI_MOSI
SAT_SPI_MISO
SAT_UART_RX
SAT_UART_TX
Sensors
I2C_SCL
I2C_SDA
IMU_PWR
INT2_IMU
GPS_UART_TX
GPS_UART_RX
GPS_TX
GPS_RX
ADC0
ADC1
SPI_NSS
SPI_CLK
SPI_MOSI
SPI_MISO
GPIO
USB_D_P
USB_D_N
R4 10kR
R3 1KR
Q1
Q2
R5 120kR
R6 300kR
VBAT_SENSE
GND
Option to connect bat reading to nRF
Bat_sense (max) = 3V
Bat_sense (min) = 2.36V
R61 4.7K
R62 4.7K
R1 4.7K
R2 4.7K
DNM
Dedicated to external barometer, 0 to 2.5V
Option to used AIN3 as Common GND
Title Linkit Kim/SMD
Size: A4
Reference: linkit-v4
Revision: 1 0
Date: 26/11/2025
Time: 10:21:10
Sheet 2 of 12
File: C:\Users\fourn\Altium\AD25\Projects\Arribada\linkit-v4-hw\linkit-v4.SchDoc
Arribada Initiative
https://github.com/arribada
contact@arribada.org
arribada.org
UK - Portsmouth
ARRIBADA initiative

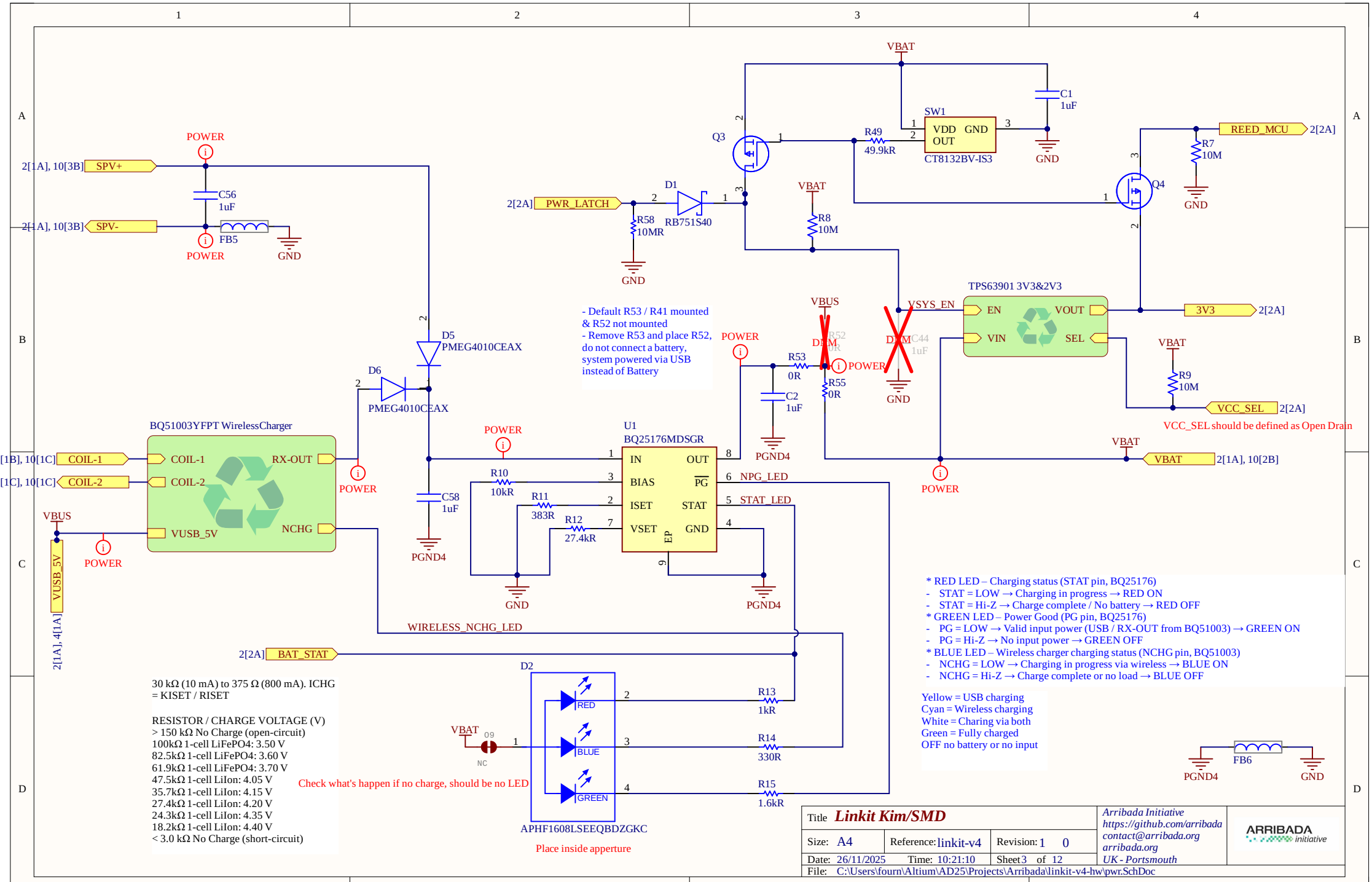
VBAT
C1
1uF
SW1
VDD GND
OUT
CT8132BV-IS3
GND
Q3
R49
49.9kR
REED_MCU
2[2A]
R7
10M
Q4
GND
2[1A], 10[3B]
SPV+
POWER
C56
1uF
2[1A], 10[3B]
SPV-
FB5
POWER
GND
2[2A]
PWR_LATCH
D1
RB751S40
R58
10MR
GND
VBAT
R8
10M
TPS63901 3V3&2V3
EN
VOUT
VIN
SEL
VSYS_EN
3V3
2[2A]
VBUS
R52
0R
DNM
C44
1uF
DNM
POWER
R53
0R
R55
0R
C2
1uF
GND
VBAT
R9
10M
VCC_SEL
2[2A]
VCC_SEL should be defined as Open Drain
- Default R53 / R41 mounted
& R52 not mounted
- Remove R53 and place R52,
do not connect a battery,
system powered via USB
instead of Battery
D5
PMEG4010CEAX
D6
PMEG4010CEAX
BQ51003YFPT WirelessCharger
[1B], 10[1C]
COIL-1
[1C], 10[1C]
COIL-2
RX-OUT
VUSB_5V
NCHG
VBUS
POWER
VUSB_5V
2[1A], 4[1A]
C58
1uF
PGND4
U1
BQ25176MDSGR
IN
OUT
BIAS
PG
ISET
STAT
VSET
GND
EP
R10
10kR
R11
383R
R12
27.4kR
NPG_LED
STAT_LED
GND
PGND4
VBAT
2[1A], 10[2B]
WIRELESS_NCHG_LED
2[2A]
BAT_STAT
D2
RED
BLUE
GREEN
R13
1kR
R14
330R
R15
1.6kR
VBAT
D9
NC
APHF1608LSEEQBDZGKC
Place inside apperture
Check what's happen if no charge, should be no LED
30 kΩ (10 mA) to 375 Ω (800 mA). ICHG
= KISET / RISET
RESISTOR / CHARGE VOLTAGE (V)
> 150 kΩ No Charge (open-circuit)
100kΩ 1-cell LiFePO4: 3.50 V
82.5kΩ 1-cell LiFePO4: 3.60 V
61.9kΩ 1-cell LiFePO4: 3.70 V
47.5kΩ 1-cell LiIon: 4.05 V
35.7kΩ 1-cell LiIon: 4.15 V
27.4kΩ 1-cell LiIon: 4.20 V
24.3kΩ 1-cell LiIon: 4.35 V
18.2kΩ 1-cell LiIon: 4.40 V
< 3.0 kΩ No Charge (short-circuit)
* RED LED – Charging status (STAT pin, BQ25176)
- STAT = LOW → Charging in progress → RED ON
- STAT = Hi-Z → Charge complete / No battery → RED OFF
* GREEN LED – Power Good (PG pin, BQ25176)
- PG = LOW → Valid input power (USB / RX-OUT from BQ51003) → GREEN ON
- PG = Hi-Z → No input power → GREEN OFF
* BLUE LED – Wireless charger charging status (NCHG pin, BQ51003)
- NCHG = LOW → Charging in progress via wireless → BLUE ON
- NCHG = Hi-Z → Charge complete or no load → BLUE OFF
Yellow = USB charging
Cyan = Wireless charging
White = Charing via both
Green = Fully charged
OFF no battery or no input
FB6
PGND4
GND
Title Linkit Kim/SMD
Size: A4
Reference: linkit-v4
Revision: 1 0
Date: 26/11/2025
Time: 10:21:10
Sheet 3 of 12
File: C:\Users\fourn\Altium\AD25\Projects\Arribada\linkit-v4-hw\pwr.SchDoc
Arribada Initiative
https://github.com/arribada
contact@arribada.org
arribada.org
UK - Portsmouth
ARRIBADA initiative

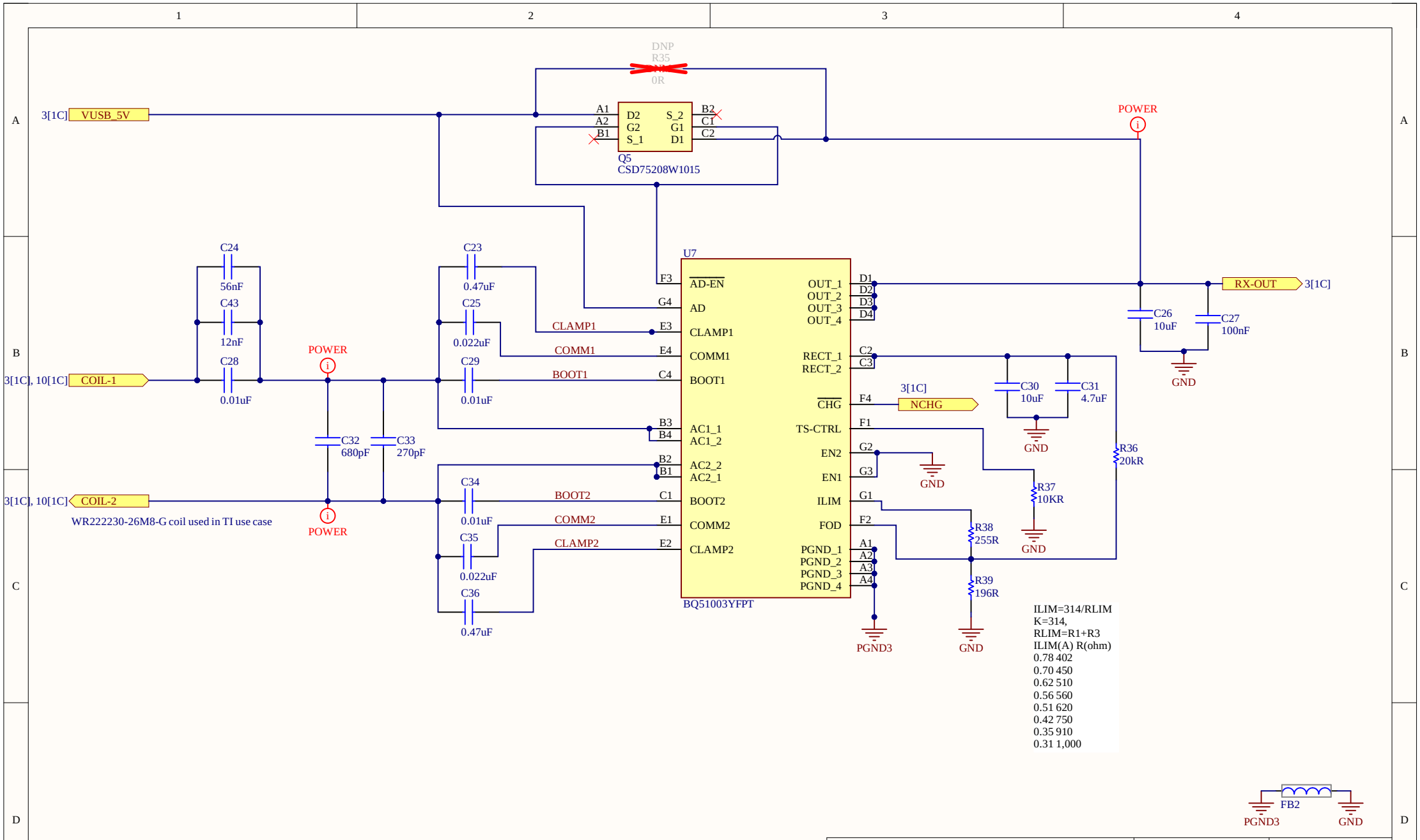

Title	Linkit Kim/SMD		Arribada Initiative https://github.com/arribada contact@arribada.org arribada.org UK - Portsmouth
Size: A4	Reference: linkit-v4	Revision: 1 0	
Date: 26/11/2025	Time: 10:21:10	Sheet 4 of 12	
File: C:\Users\fourn\Altium\AD25\Projects\Arribada\hardware-lib\DeviceSheets\Power\BQ51003YFPT_WirelessCharger_2.5W.S			

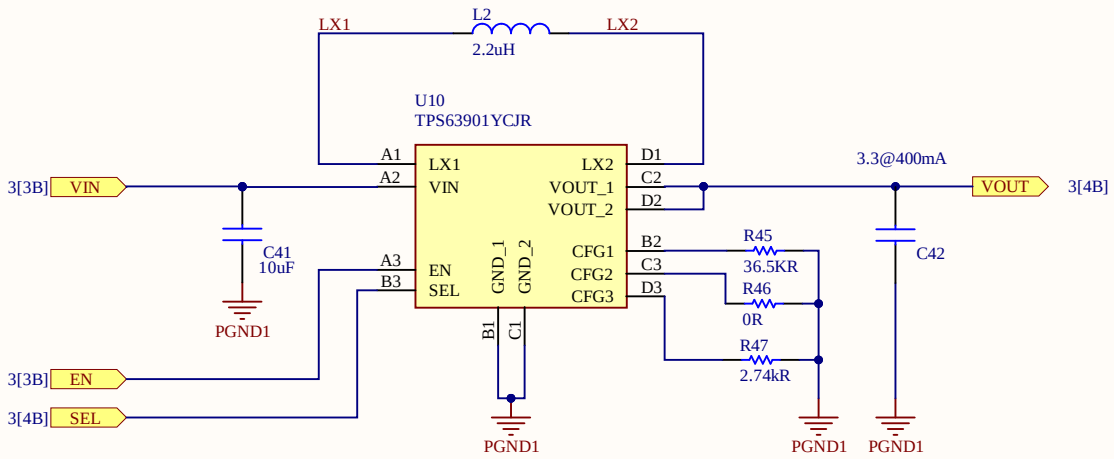

Output Voltage – $V_{O(2)}$ (SEL = HIGH)		Input Current Limit							
		UNLIMITED	100 mA	50 mA	25 mA	10 mA	5 mA	2.5 mA	1 mA
1.8 V	R_{CFG1}	0 Ω							
	R_{CFG2}	0 Ω	511 Ω	1.15 kΩ	1.87 kΩ	2.74 kΩ	3.83 kΩ	5.11 kΩ	6.49 kΩ
1.9 V	R_{CFG1}	511 Ω							
	R_{CFG2}	0 Ω	511 Ω	1.15 kΩ	1.87 kΩ	2.74 kΩ	3.83 kΩ	5.11 kΩ	6.49 kΩ
2.0 V	R_{CFG1}	1.15 kΩ							
	R_{CFG2}	0 Ω	511 Ω	1.15 kΩ	1.87 kΩ	2.74 kΩ	3.83 kΩ	5.11 kΩ	6.49 kΩ
2.1 V	R_{CFG1}	1.87 kΩ							
	R_{CFG2}	0 Ω	511 Ω	1.15 kΩ	1.87 kΩ	2.74 kΩ	3.83 kΩ	5.11 kΩ	6.49 kΩ
2.2 V	R_{CFG1}	2.74 kΩ							
	R_{CFG2}	0 Ω	511 Ω	1.15 kΩ	1.87 kΩ	2.74 kΩ	3.83 kΩ	5.11 kΩ	6.49 kΩ
2.3 V	R_{CFG1}	3.83 kΩ							
	R_{CFG2}	0 Ω	511 Ω	1.15 kΩ	1.87 kΩ	2.74 kΩ	3.83 kΩ	5.11 kΩ	6.49 kΩ
2.4 V	R_{CFG1}	5.11 kΩ							
	R_{CFG2}	0 Ω	511 Ω	1.15 kΩ	1.87 kΩ	2.74 kΩ	3.83 kΩ	5.11 kΩ	6.49 kΩ
2.5 V	R_{CFG1}	6.49 kΩ							
	R_{CFG2}	0 Ω	511 Ω	1.15 kΩ	1.87 kΩ	2.74 kΩ	3.83 kΩ	5.11 kΩ	6.49 kΩ
2.6 V	R_{CFG1}	8.25 kΩ							
	R_{CFG2}	0 Ω	511 Ω	1.15 kΩ	1.87 kΩ	2.74 kΩ	3.83 kΩ	5.11 kΩ	6.49 kΩ
2.7 V	R_{CFG1}	10.5 kΩ							
	R_{CFG2}	0 Ω	511 Ω	1.15 kΩ	1.87 kΩ	2.74 kΩ	3.83 kΩ	5.11 kΩ	6.49 kΩ
2.8 V	R_{CFG1}	13.3 kΩ							
	R_{CFG2}	0 Ω	511 Ω	1.15 kΩ	1.87 kΩ	2.74 kΩ	3.83 kΩ	5.11 kΩ	6.49 kΩ
2.9 V	R_{CFG1}	16.2 kΩ							
	R_{CFG2}	0 Ω	511 Ω	1.15 kΩ	1.87 kΩ	2.74 kΩ	3.83 kΩ	5.11 kΩ	6.49 kΩ
3.0 V	R_{CFG1}	20.5 kΩ							
	R_{CFG2}	0 Ω	511 Ω	1.15 kΩ	1.87 kΩ	2.74 kΩ	3.83 kΩ	5.11 kΩ	6.49 kΩ
3.1 V	R_{CFG1}	24.9 kΩ							
	R_{CFG2}	0 Ω	511 Ω	1.15 kΩ	1.87 kΩ	2.74 kΩ	3.83 kΩ	5.11 kΩ	6.49 kΩ
3.2 V	R_{CFG1}	30.1 kΩ							
	R_{CFG2}	0 Ω	511 Ω	1.15 kΩ	1.87 kΩ	2.74 kΩ	3.83 kΩ	5.11 kΩ	6.49 kΩ
3.3 V	R_{CFG1}	36.5 kΩ							
	R_{CFG2}	0 Ω	511 Ω	1.15 kΩ	1.87 kΩ	2.74 kΩ	3.83 kΩ	5.11 kΩ	6.49 kΩ
3.4 V	R_{CFG1}	0 Ω							
	R_{CFG2}	8.25 kΩ	10.5 kΩ	13.3 kΩ	16.2 kΩ	20.5 kΩ	24.9 kΩ	30.1 kΩ	36.5 kΩ
3.5 V	R_{CFG1}	511 Ω							
	R_{CFG2}	8.25 kΩ	10.5 kΩ	13.3 kΩ	16.2 kΩ	20.5 kΩ	24.9 kΩ	30.1 kΩ	36.5 kΩ
3.6 V	R_{CFG1}	1.15 kΩ							
	R_{CFG2}	8.25 kΩ	10.5 kΩ	13.3 kΩ	16.2 kΩ	20.5 kΩ	24.9 kΩ	30.1 kΩ	36.5 kΩ
3.7 V	R_{CFG1}	1.87 kΩ							
	R_{CFG2}	8.25 kΩ	10.5 kΩ	13.3 kΩ	16.2 kΩ	20.5 kΩ	24.9 kΩ	30.1 kΩ	36.5 kΩ
3.8 V	R_{CFG1}	2.74 kΩ							
	R_{CFG2}	8.25 kΩ	10.5 kΩ	13.3 kΩ	16.2 kΩ	20.5 kΩ	24.9 kΩ	30.1 kΩ	36.5 kΩ
3.9 V	R_{CFG1}	3.83 kΩ							
	R_{CFG2}	8.25 kΩ	10.5 kΩ	13.3 kΩ	16.2 kΩ	20.5 kΩ	24.9 kΩ	30.1 kΩ	36.5 kΩ
4.0 V	R_{CFG1}	5.11 kΩ							
	R_{CFG2}	8.25 kΩ	10.5 kΩ	13.3 kΩ	16.2 kΩ	20.5 kΩ	24.9 kΩ	30.1 kΩ	36.5 kΩ
4.1 V	R_{CFG1}	6.49 kΩ							
	R_{CFG2}	8.25 kΩ	10.5 kΩ	13.3 kΩ	16.2 kΩ	20.5 kΩ	24.9 kΩ	30.1 kΩ	36.5 kΩ
4.2 V	R_{CFG1}	8.25 kΩ							
	R_{CFG2}	8.25 kΩ	10.5 kΩ	13.3 kΩ	16.2 kΩ	20.5 kΩ	24.9 kΩ	30.1 kΩ	36.5 kΩ
4.3 V	R_{CFG1}	10.5 kΩ							
	R_{CFG2}	8.25 kΩ	10.5 kΩ	13.3 kΩ	16.2 kΩ	20.5 kΩ	24.9 kΩ	30.1 kΩ	36.5 kΩ
4.4 V	R_{CFG1}	13.3 kΩ							
	R_{CFG2}	8.25 kΩ	10.5 kΩ	13.3 kΩ	16.2 kΩ	20.5 kΩ	24.9 kΩ	30.1 kΩ	36.5 kΩ
4.5 V	R_{CFG1}	16.2 kΩ							
	R_{CFG2}	8.25 kΩ	10.5 kΩ	13.3 kΩ	16.2 kΩ	20.5 kΩ	24.9 kΩ	30.1 kΩ	36.5 kΩ
4.6 V	R_{CFG1}	20.5 kΩ							
	R_{CFG2}	8.25 kΩ	10.5 kΩ	13.3 kΩ	16.2 kΩ	20.5 kΩ	24.9 kΩ	30.1 kΩ	36.5 kΩ
4.7 V	R_{CFG1}	24.9 kΩ							
	R_{CFG2}	8.25 kΩ	10.5 kΩ	13.3 kΩ	16.2 kΩ	20.5 kΩ	24.9 kΩ	30.1 kΩ	36.5 kΩ
4.8 V	R_{CFG1}	30.1 kΩ							
	R_{CFG2}	8.25 kΩ	10.5 kΩ	13.3 kΩ	16.2 kΩ	20.5 kΩ	24.9 kΩ	30.1 kΩ	36.5 kΩ
5.0 V	R_{CFG1}	36.5 kΩ							
	R_{CFG2}	8.25 kΩ	10.5 kΩ	13.3 kΩ	16.2 kΩ	20.5 kΩ	24.9 kΩ	30.1 kΩ	36.5 kΩ

Table 6-3. Output Voltage (SEL Pin = Low) Settings

Output Voltage – $V_{O(1)}$ (SEL = LOW)	R_{CFG3}
1.8 V	0 Ω
2.0 V	511 Ω
2.1 V	1.15 kΩ
2.2 V	1.87 kΩ
2.3 V	2.74 kΩ
2.4 V	3.83 kΩ
2.5 V	5.11 kΩ
2.6 V	6.49 kΩ
2.7 V	8.25 kΩ
2.8 V	10.5 kΩ
3.0 V	13.3 kΩ
3.3 V	16.2 kΩ
3.6 V	20.5 kΩ
4.0 V	24.9 kΩ
4.5 V	30.1 kΩ
5.0 V	36.5 kΩ

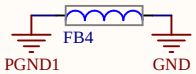

Title	*Linkit Kim/SMD*		*Arribada Initiative* *https://github.com/arribada* *contact@arribada.org* *arribada.org* *UK - Portsmouth*
Size: A4	Reference: linkit-v4	Revision: 1 0	
Date: 26/11/2025	Time: 10:21:10	Sheet 5 of 12	
File: C:\Users\fourn\Altium\AD25\Projects\Arribada\hardware-lib\DeviceSheets\Power\TPS63901_BuckBoost_lowIq_3V3&2V3			

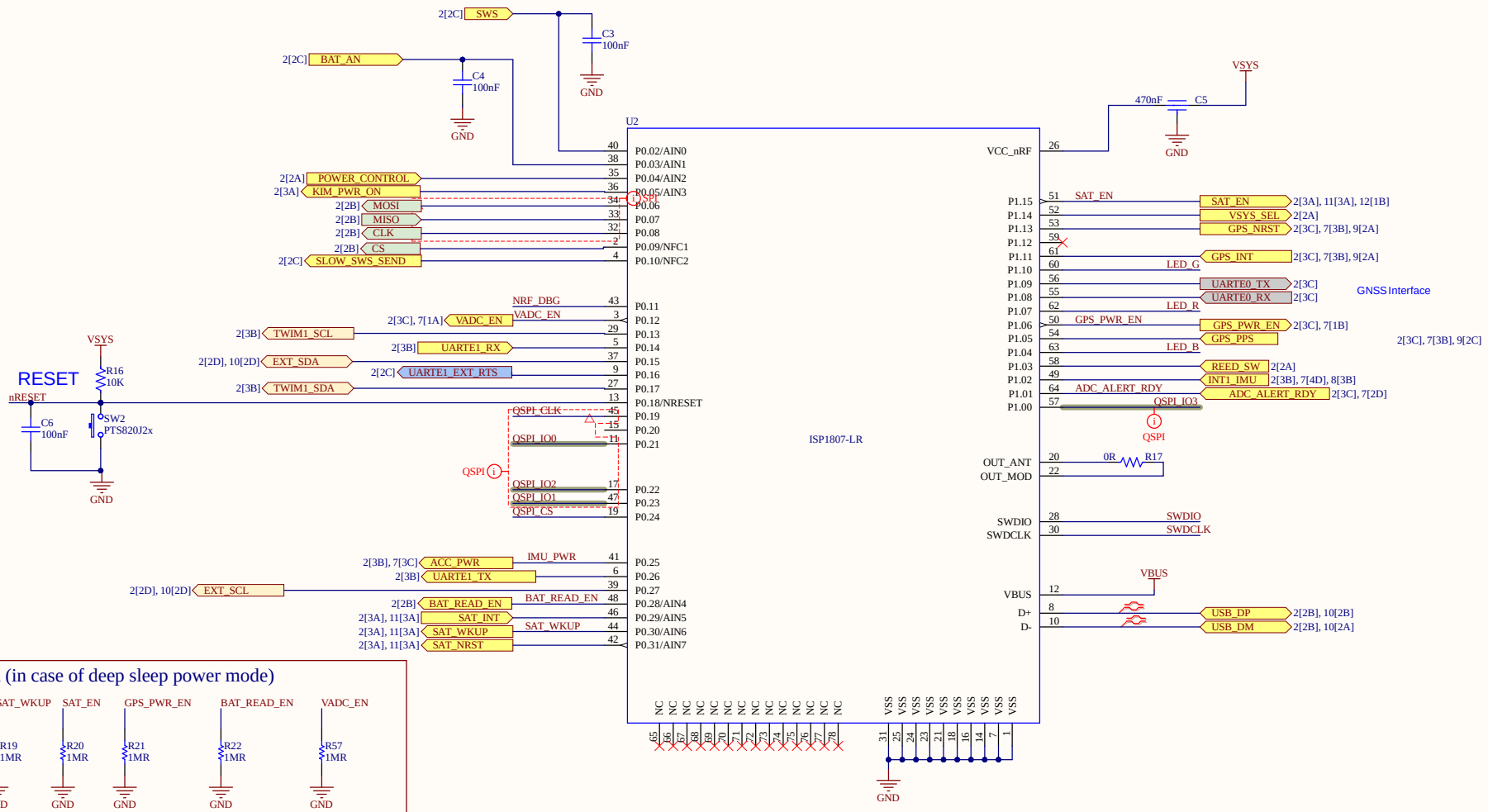

Pull down (in case of deep sleep power mode)

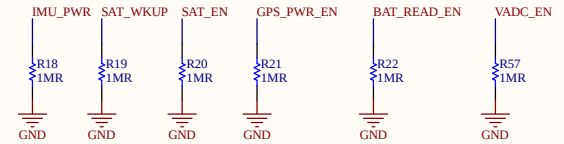

Added pull down in case we use SYSTEMOFF sleep mode, not used on linkit -> remove if power optimization is required

Flash Memory

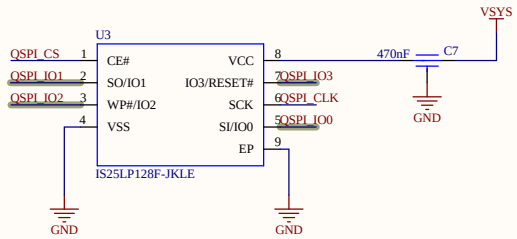

Probe connector

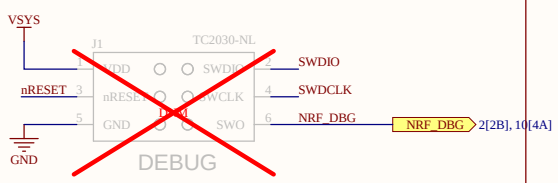

Status LED and apperture

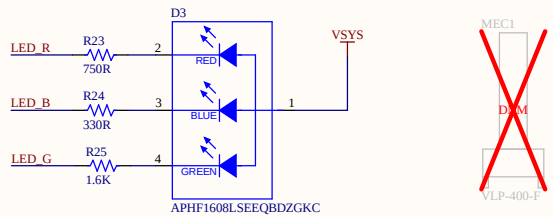

Title	*Linkit Kim/SMD*		*Arribada Initiative* *https://github.com/arribada* *contact@arribada.org* *arribada.org* *UK - Porthmouth*
Size: A3	Reference: linkit-v4	Revision: 0 1	
Date: 26/11/2025	Time: 10:21:11	Sheet 6 of 12	
File: C:\Users\fourn\Altium\AD25\Projects\Arribada\linkit-v4-hw\mcu.SchDoc			

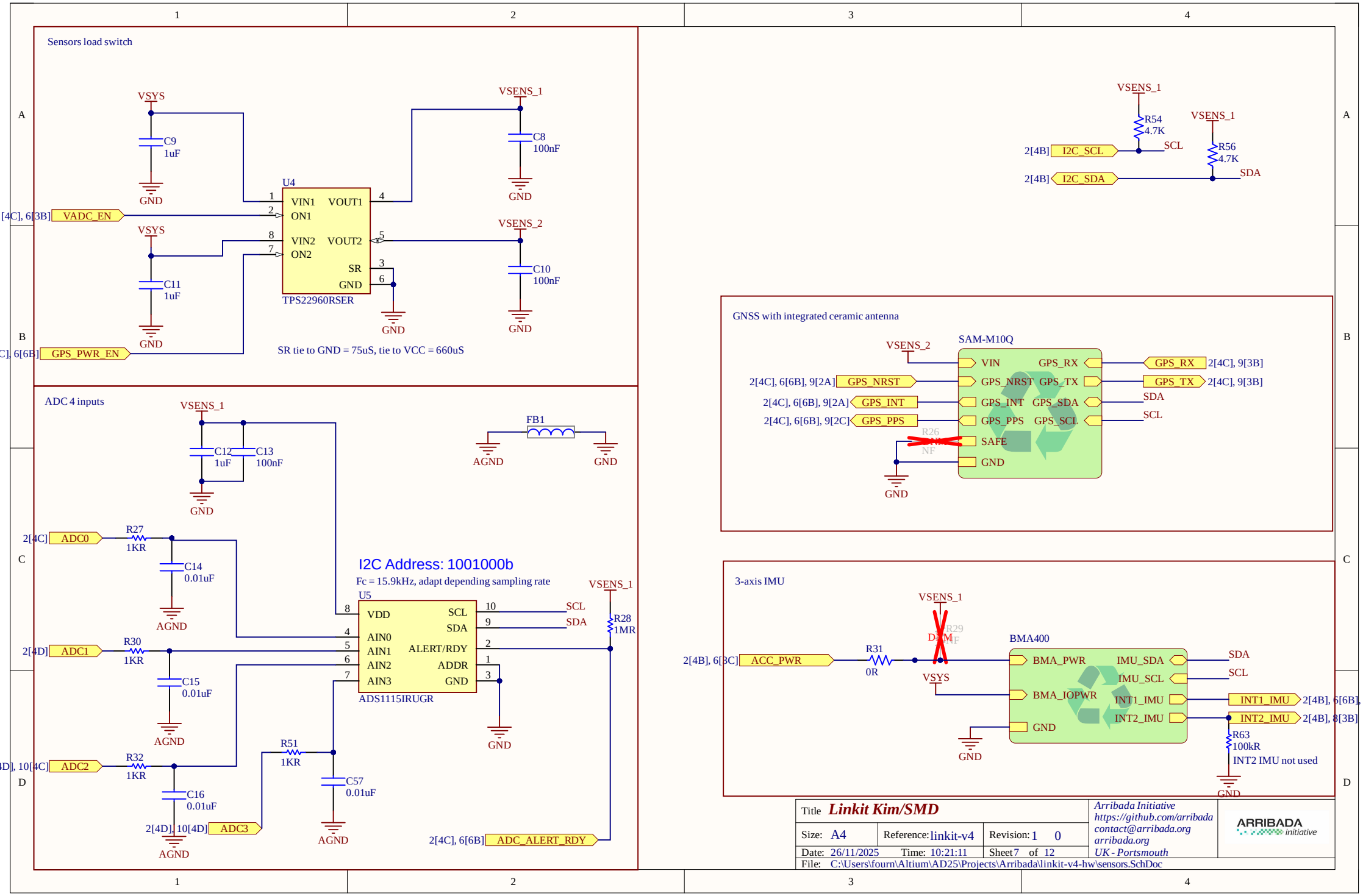

Title	Linkit Kim/SMD		Arribada Initiative https://github.com/arribada contact@arribada.org arribada.org UK - Portsmouth
Size: A4	Reference: linkit-v4	Revision: 1 0	
Date: 26/11/2025	Time: 10:21:11	Sheet 7 of 12	
File: C:\Users\fourn\Altium\AD25\Projects\Arribada\linkit-v4-hw\sensors.SchDoc			

Accelerometer, Temperature Sensor
Accel I2C Address: 0010100

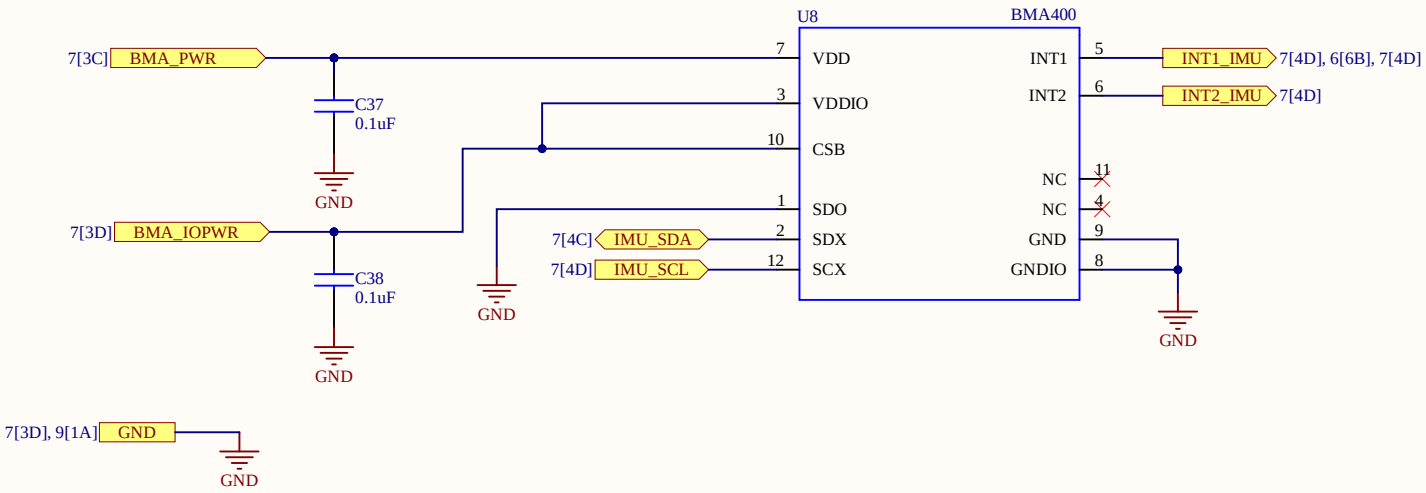

Title	*OP-Tracker*		
Size: A4	Reference: OP_0.1	Revision: 0 0	
Date: 26/11/2025	Time: 10:21:11	Sheet of	
File: C:\Users\fourn\Altium\AD25\Projects\Arribada\hardware-lib\DeviceSheets\SENSORS\BMA400_ACC_LinkitV3.SchDoc			

ARRIBADA initiative

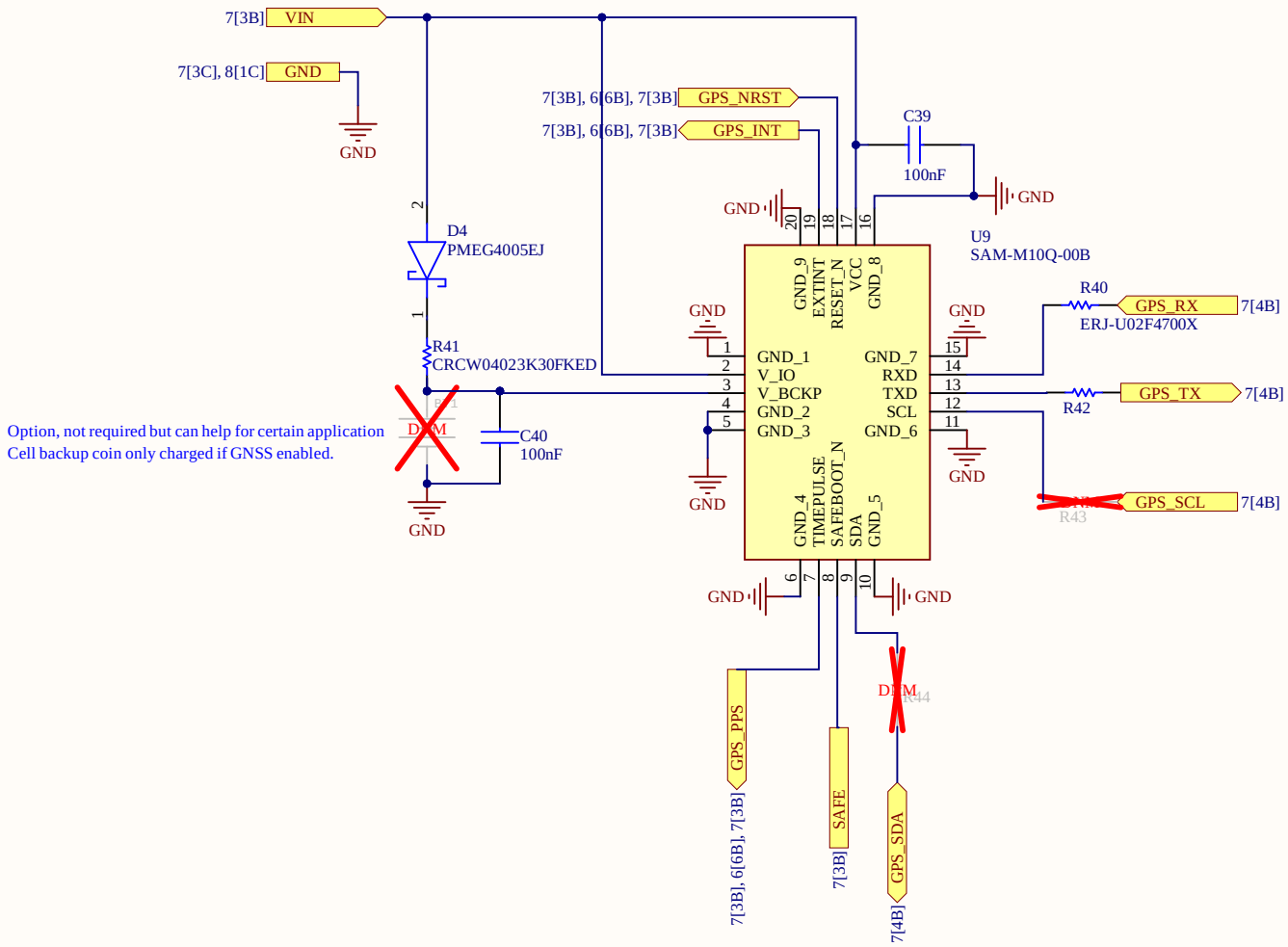

Title **Linkit Kim/SMD**			*Arribada Initiative* *https://github.com/arribada* *contact@arribada.org* *arribada.org* *UK - Portsmouth*
Size: A4	Reference: linkit-v4	Revision: 1 0	
Date: 26/11/2025	Time: 10:21:11	Sheet 9 of 12	
File: C:\Users\fourn\Altium\AD25\Projects\Arribada\hardware-lib\DeviceSheets\GPS\SAM-M10Q.SchDoc			

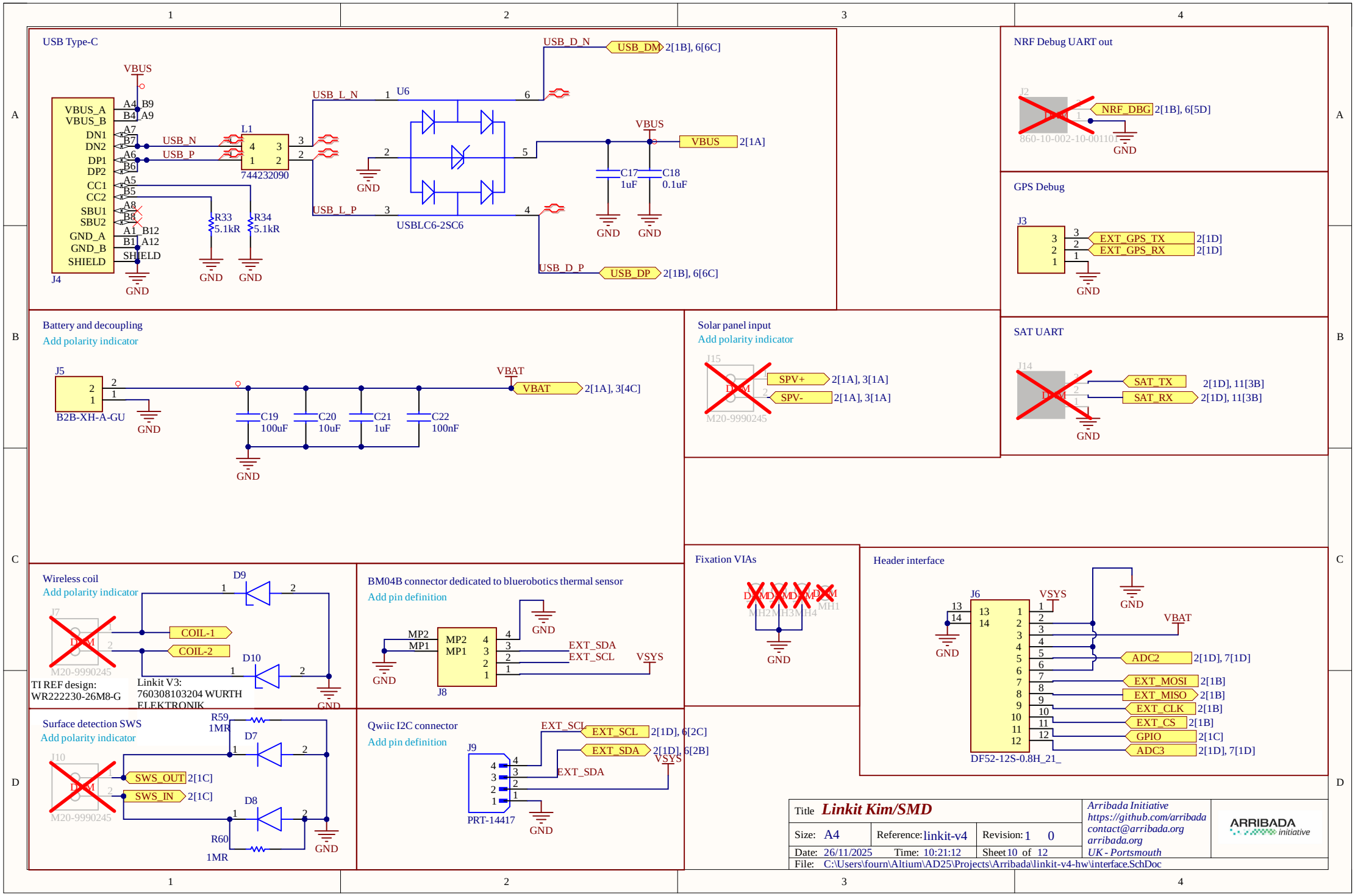
USB Type-C
VBUS
VBUS_A
VBUS_B
DN1
DN2
DP1
DP2
CC1
CC2
SBU1
SBU2
GND_A
GND_B
SHIELD
J4
USB_N
USB_P
L1
744232090
R33 5.1kR
R34 5.1kR
GND
USB_L_N
USB_L_P
U6
USBLC6-2SC6
USB_D_N
USB_DM 2[1B], 6[6C]
USB_D_P
USB_DP 2[1B], 6[6C]
VBUS
VBUS 2[1A]
C17 1uF
C18 0.1uF
NRF Debug UART out
J2
NRF_DBG 2[1B], 6[5D]
860-10-002-10-001101
GPS Debug
J3
EXT_GPS_TX 2[1D]
EXT_GPS_RX 2[1D]
Battery and decoupling
Add polarity indicator
J5
B2B-XH-A-GU
VBAT
VBAT 2[1A], 3[4C]
C19 100uF
C20 10uF
C21 1uF
C22 100nF
Solar panel input
Add polarity indicator
J15
SPV+ 2[1A], 3[1A]
SPV- 2[1A], 3[1A]
M20-9990245
SAT UART
J14
SAT_TX 2[1D], 11[3B]
SAT_RX 2[1D], 11[3B]
Wireless coil
Add polarity indicator
D9
D10
J7
COIL-1
COIL-2
M20-9990245
TI REF design:
WR222230-26M8-G
Linkit V3:
760308103204 WURTH
ELEKTRONIK
BM04B connector dedicated to bluerobotics thermal sensor
Add pin definition
MP2
MP1
J8
EXT_SDA
EXT_SCL
VSYS
Fixation VIAs
MH1
MH2
MH3
MH4
Header interface
J6
VSYS
VBAT
ADC2 2[1D], 7[1D]
EXT_MOSI 2[1B]
EXT_MISO 2[1B]
EXT_CLK 2[1B]
EXT_CS 2[1B]
GPIO 2[1C]
ADC3 2[1D], 7[1D]
DF52-12S-0.8H_21_
Surface detection SWS
Add polarity indicator
R59 1MR
D7
D8
R60 1MR
J10
SWS_OUT 2[1C]
SWS_IN 2[1C]
M20-9990245
Qwiic I2C connector
Add pin definition
J9
EXT_SCL 2[1D], 6[2C]
EXT_SDA 2[1D], 6[2B]
VSYS
PRT-14417
Title Linkit Kim/SMD
Size: A4
Reference: linkit-v4
Revision: 1 0
Date: 26/11/2025
Time: 10:21:12
Sheet 10 of 12
File: C:\Users\fourn\Altium\AD25\Projects\Arribada\linkit-v4-hw\interface.SchDoc
Arribada Initiative
https://github.com/arribada
contact@arribada.org
arribada.org
UK - Portsmouth
ARRIBADA initiative

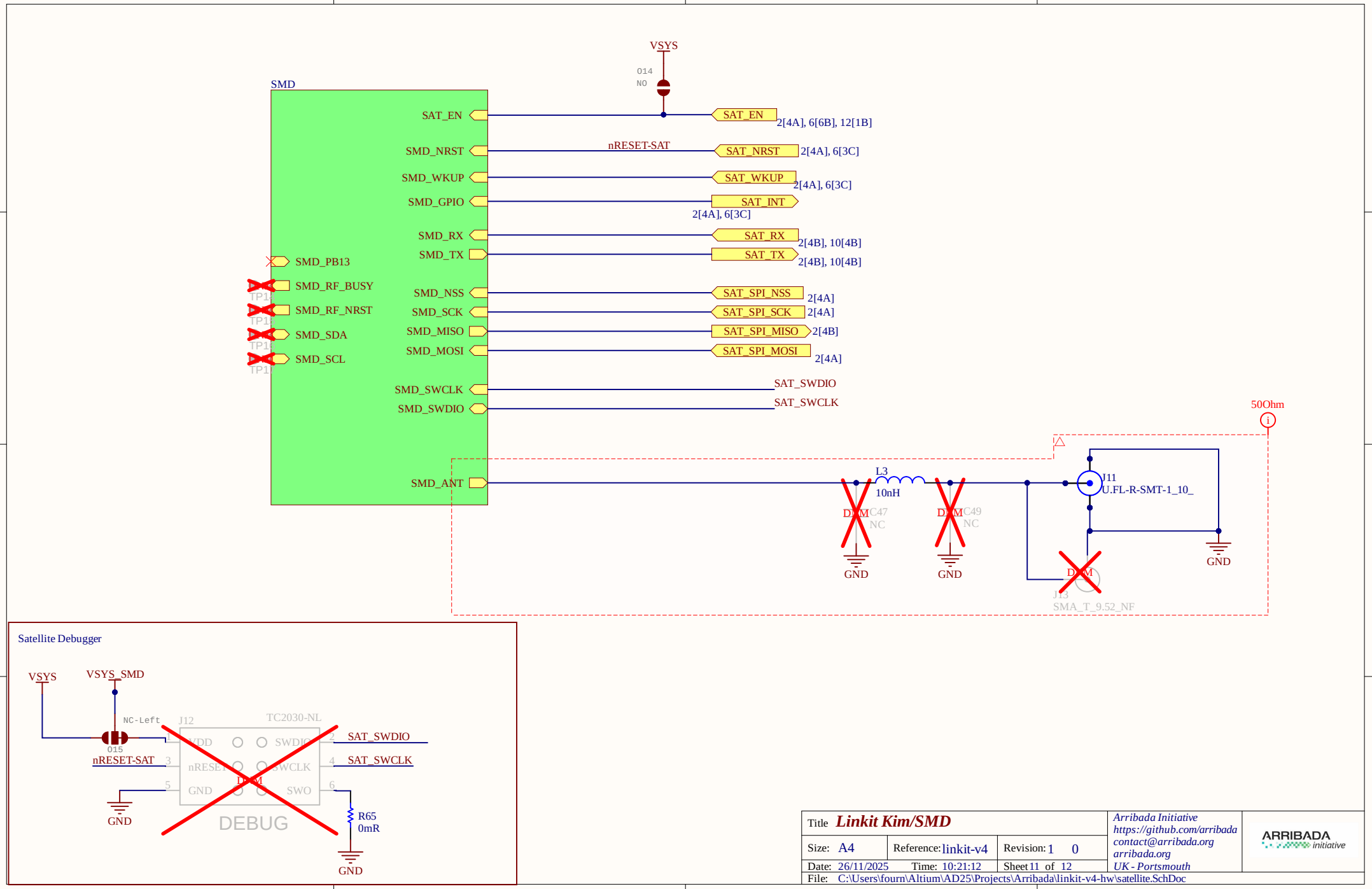
VSYS
014
NO
SMD
SAT_EN
SMD_NRST
SMD_WKUP
SMD_GPIO
SMD_RX
SMD_TX
SMD_PB13
SMD_RF_BUSY
SMD_RF_NRST
SMD_SDA
SMD_SCL
SMD_NSS
SMD_SCK
SMD_MISO
SMD_MOSI
SMD_SWCLK
SMD_SWDIO
SMD_ANT
SAT_EN
2[4A], 6[6B], 12[1B]
nRESET-SAT
SAT_NRST
2[4A], 6[3C]
SAT_WKUP
2[4A], 6[3C]
SAT_INT
2[4A], 6[3C]
SAT_RX
2[4B], 10[4B]
SAT_TX
2[4B], 10[4B]
SAT_SPI_NSS
2[4A]
SAT_SPI_SCK
2[4A]
SAT_SPI_MISO
2[4B]
SAT_SPI_MOSI
2[4A]
SAT_SWDIO
SAT_SWCLK
50Ohm
L3
10nH
DNM C47
NC
DNM C49
NC
GND
GND
J11
U.FL-R-SMT-1_10_
GND
DNM
J13
SMA_T_9.52_NF
Satellite Debugger
VSYS
VSYS_SMD
NC-Left
015
nRESET-SAT
J12
TC2030-NL
VDD
SWDIO
nRESET
SWCLK
GND
SWO
DNM
DEBUG
SAT_SWDIO
SAT_SWCLK
GND
R65
0mR
GND
Title Linkit Kim/SMD
Size: A4
Reference: linkit-v4
Revision: 1 0
Date: 26/11/2025
Time: 10:21:12
Sheet 11 of 12
File: C:\Users\fourn\Altium\AD25\Projects\Arribada\linkit-v4-hw\satellite.SchDoc
Arribada Initiative
https://github.com/arribada
contact@arribada.org
arribada.org
UK - Portsmouth
ARRIBADA
initiative

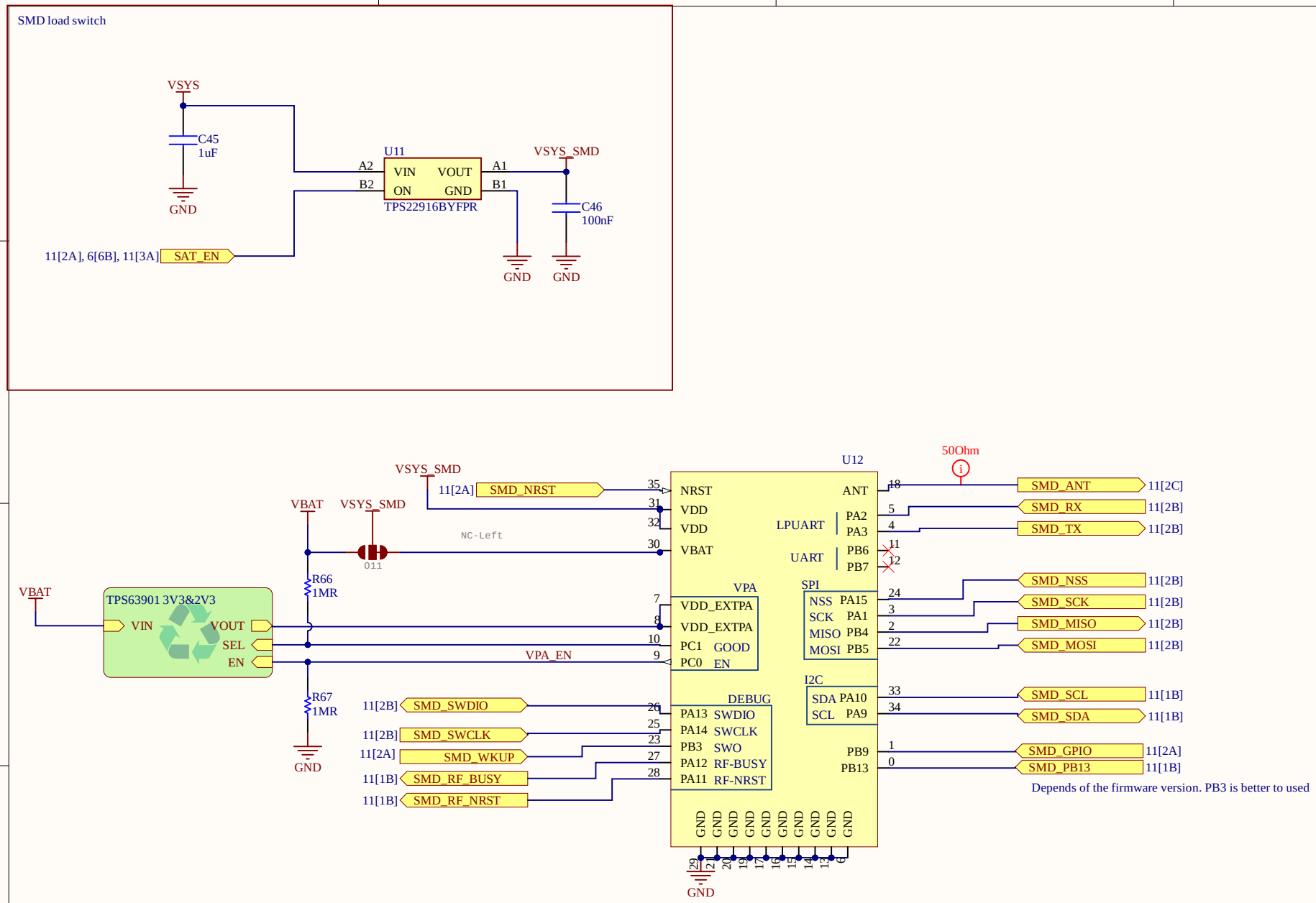

Title	*Linkit Kim/SMD*		*Arribada Initiative*
Size: A4	Reference: linkit-v4	Revision: 1 0	*https://github.com/arribada*
Date: 26/11/2025	Time: 10:21:12	Sheet 12 of 12	*contact@arribada.org*
File: C:\Users\fourn\Altium\AD25\Projects\Arribada\linkit-v4-hw\sat-smd.SchDoc			*arribada.org*
			UK - Portsmouth

ARRIBADA initiative

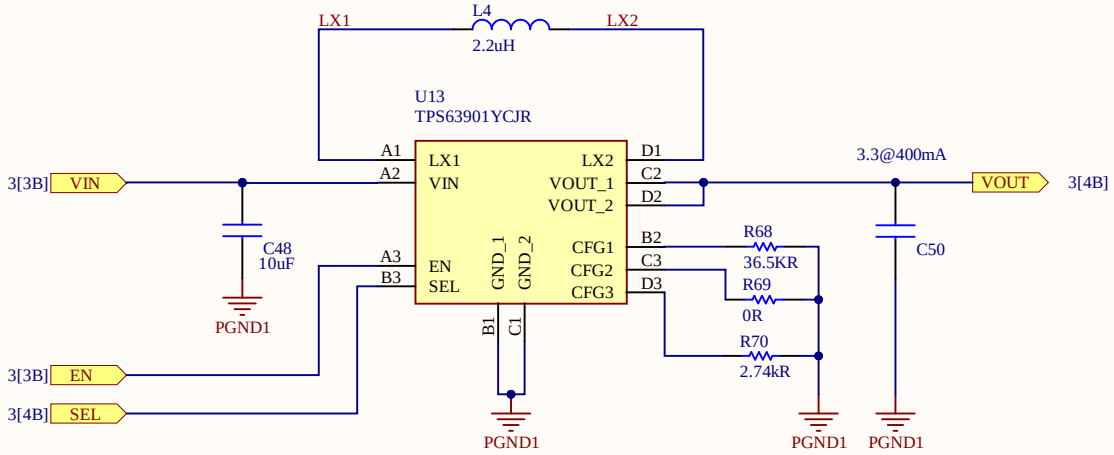

Output Voltage – $V_{O(2)}$ (SEL = HIGH)		Input Current Limit							
		UNLIMITED	100 mA	50 mA	25 mA	10 mA	5 mA	2.5 mA	1 mA
1.8 V	R_{CFG1}	0 Ω							
	R_{CFG2}	0 Ω	511 Ω	1.15 kΩ	1.87 kΩ	2.74 kΩ	3.83 kΩ	5.11 kΩ	6.49 kΩ
1.9 V	R_{CFG1}	511 Ω							
	R_{CFG2}	0 Ω	511 Ω	1.15 kΩ	1.87 kΩ	2.74 kΩ	3.83 kΩ	5.11 kΩ	6.49 kΩ
2.0 V	R_{CFG1}	1.15 kΩ							
	R_{CFG2}	0 Ω	511 Ω	1.15 kΩ	1.87 kΩ	2.74 kΩ	3.83 kΩ	5.11 kΩ	6.49 kΩ
2.1 V	R_{CFG1}	1.87 kΩ							
	R_{CFG2}	0 Ω	511 Ω	1.15 kΩ	1.87 kΩ	2.74 kΩ	3.83 kΩ	5.11 kΩ	6.49 kΩ
2.2 V	R_{CFG1}	2.74 kΩ							
	R_{CFG2}	0 Ω	511 Ω	1.15 kΩ	1.87 kΩ	2.74 kΩ	3.83 kΩ	5.11 kΩ	6.49 kΩ
2.3 V	R_{CFG1}	3.83 kΩ							
	R_{CFG2}	0 Ω	511 Ω	1.15 kΩ	1.87 kΩ	2.74 kΩ	3.83 kΩ	5.11 kΩ	6.49 kΩ
2.4 V	R_{CFG1}	5.11 kΩ							
	R_{CFG2}	0 Ω	511 Ω	1.15 kΩ	1.87 kΩ	2.74 kΩ	3.83 kΩ	5.11 kΩ	6.49 kΩ
2.5 V	R_{CFG1}	6.49 kΩ							
	R_{CFG2}	0 Ω	511 Ω	1.15 kΩ	1.87 kΩ	2.74 kΩ	3.83 kΩ	5.11 kΩ	6.49 kΩ
2.6 V	R_{CFG1}	8.25 kΩ							
	R_{CFG2}	0 Ω	511 Ω	1.15 kΩ	1.87 kΩ	2.74 kΩ	3.83 kΩ	5.11 kΩ	6.49 kΩ
2.7 V	R_{CFG1}	10.5 kΩ							
	R_{CFG2}	0 Ω	511 Ω	1.15 kΩ	1.87 kΩ	2.74 kΩ	3.83 kΩ	5.11 kΩ	6.49 kΩ
2.8 V	R_{CFG1}	13.3 kΩ							
	R_{CFG2}	0 Ω	511 Ω	1.15 kΩ	1.87 kΩ	2.74 kΩ	3.83 kΩ	5.11 kΩ	6.49 kΩ
2.9 V	R_{CFG1}	16.2 kΩ							
	R_{CFG2}	0 Ω	511 Ω	1.15 kΩ	1.87 kΩ	2.74 kΩ	3.83 kΩ	5.11 kΩ	6.49 kΩ
3.0 V	R_{CFG1}	20.5 kΩ							
	R_{CFG2}	0 Ω	511 Ω	1.15 kΩ	1.87 kΩ	2.74 kΩ	3.83 kΩ	5.11 kΩ	6.49 kΩ
3.1 V	R_{CFG1}	24.9 kΩ							
	R_{CFG2}	0 Ω	511 Ω	1.15 kΩ	1.87 kΩ	2.74 kΩ	3.83 kΩ	5.11 kΩ	6.49 kΩ
3.2 V	R_{CFG1}	30.1 kΩ							
	R_{CFG2}	0 Ω	511 Ω	1.15 kΩ	1.87 kΩ	2.74 kΩ	3.83 kΩ	5.11 kΩ	6.49 kΩ
3.3 V	R_{CFG1}	36.5 kΩ							
	R_{CFG2}	0 Ω	511 Ω	1.15 kΩ	1.87 kΩ	2.74 kΩ	3.83 kΩ	5.11 kΩ	6.49 kΩ
3.4 V	R_{CFG1}	0 Ω							
	R_{CFG2}	8.25 kΩ	10.5 kΩ	13.3 kΩ	16.2 kΩ	20.5 kΩ	24.9 kΩ	30.1 kΩ	36.5 kΩ
3.5 V	R_{CFG1}	511 Ω							
	R_{CFG2}	8.25 kΩ	10.5 kΩ	13.3 kΩ	16.2 kΩ	20.5 kΩ	24.9 kΩ	30.1 kΩ	36.5 kΩ
3.6 V	R_{CFG1}	1.15 kΩ							
	R_{CFG2}	8.25 kΩ	10.5 kΩ	13.3 kΩ	16.2 kΩ	20.5 kΩ	24.9 kΩ	30.1 kΩ	36.5 kΩ
3.7 V	R_{CFG1}	1.87 kΩ							
	R_{CFG2}	8.25 kΩ	10.5 kΩ	13.3 kΩ	16.2 kΩ	20.5 kΩ	24.9 kΩ	30.1 kΩ	36.5 kΩ
3.8 V	R_{CFG1}	2.74 kΩ							
	R_{CFG2}	8.25 kΩ	10.5 kΩ	13.3 kΩ	16.2 kΩ	20.5 kΩ	24.9 kΩ	30.1 kΩ	36.5 kΩ
3.9 V	R_{CFG1}	3.83 kΩ							
	R_{CFG2}	8.25 kΩ	10.5 kΩ	13.3 kΩ	16.2 kΩ	20.5 kΩ	24.9 kΩ	30.1 kΩ	36.5 kΩ
4.0 V	R_{CFG1}	5.11 kΩ							
	R_{CFG2}	8.25 kΩ	10.5 kΩ	13.3 kΩ	16.2 kΩ	20.5 kΩ	24.9 kΩ	30.1 kΩ	36.5 kΩ
4.1 V	R_{CFG1}	6.49 kΩ							
	R_{CFG2}	8.25 kΩ	10.5 kΩ	13.3 kΩ	16.2 kΩ	20.5 kΩ	24.9 kΩ	30.1 kΩ	36.5 kΩ
4.2 V	R_{CFG1}	8.25 kΩ							
	R_{CFG2}	8.25 kΩ	10.5 kΩ	13.3 kΩ	16.2 kΩ	20.5 kΩ	24.9 kΩ	30.1 kΩ	36.5 kΩ
4.3 V	R_{CFG1}	10.5 kΩ							
	R_{CFG2}	8.25 kΩ	10.5 kΩ	13.3 kΩ	16.2 kΩ	20.5 kΩ	24.9 kΩ	30.1 kΩ	36.5 kΩ
4.4 V	R_{CFG1}	13.3 kΩ							
	R_{CFG2}	8.25 kΩ	10.5 kΩ	13.3 kΩ	16.2 kΩ	20.5 kΩ	24.9 kΩ	30.1 kΩ	36.5 kΩ
4.5 V	R_{CFG1}	16.2 kΩ							
	R_{CFG2}	8.25 kΩ	10.5 kΩ	13.3 kΩ	16.2 kΩ	20.5 kΩ	24.9 kΩ	30.1 kΩ	36.5 kΩ
4.6 V	R_{CFG1}	20.5 kΩ							
	R_{CFG2}	8.25 kΩ	10.5 kΩ	13.3 kΩ	16.2 kΩ	20.5 kΩ	24.9 kΩ	30.1 kΩ	36.5 kΩ
4.7 V	R_{CFG1}	24.9 kΩ							
	R_{CFG2}	8.25 kΩ	10.5 kΩ	13.3 kΩ	16.2 kΩ	20.5 kΩ	24.9 kΩ	30.1 kΩ	36.5 kΩ
4.8 V	R_{CFG1}	30.1 kΩ							
	R_{CFG2}	8.25 kΩ	10.5 kΩ	13.3 kΩ	16.2 kΩ	20.5 kΩ	24.9 kΩ	30.1 kΩ	36.5 kΩ
5.0 V	R_{CFG1}	36.5 kΩ							
	R_{CFG2}	8.25 kΩ	10.5 kΩ	13.3 kΩ	16.2 kΩ	20.5 kΩ	24.9 kΩ	30.1 kΩ	36.5 kΩ

Table 6-3. Output Voltage (SEL Pin = Low) Settings

Output Voltage – $V_{O(1)}$ (SEL = LOW)	R_{CFG3}
1.8 V	0 Ω
2.0 V	511 Ω
2.1 V	1.15 kΩ
2.2 V	1.87 kΩ
2.3 V	2.74 kΩ
2.4 V	3.83 kΩ
2.5 V	5.11 kΩ
2.6 V	6.49 kΩ
2.7 V	8.25 kΩ
2.8 V	10.5 kΩ
3.0 V	13.3 kΩ
3.3 V	16.2 kΩ
3.6 V	20.5 kΩ
4.0 V	24.9 kΩ
4.5 V	30.1 kΩ
5.0 V	36.5 kΩ

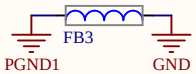

Title	*Linkit Kim/SMD*		*Arribada Initiative* *https://github.com/arribada* *contact@arribada.org* *arribada.org* *UK - Portsmouth*
Size: A4	Reference: linkit-v4	Revision: 1 0	
Date: 26/11/2025	Time: 10:21:12	Sheet 5 of 12	
File: C:\Users\fourn\Altium\AD25\Projects\Arribada\hardware-lib\DeviceSheets\Power\TPS63901_BuckBoost_lowIq_3V3&2V3			

Board Stack Report

Stack Up		Layer Stack			
Layer	Board Layer Stack	Name	Material	Thickness	Constant
1		Top Overlay		0mil	
2		Top Solder	SM-003	1mil	4
3		Top Surface Finish	Nickel, Gold	0.158mil	
4		Top Layer	CF-004	1.378mil	
5		Dielectric 1	S1000-2MB	1.951mil	4.25
6		Dielectric 2	S1000-2MB	1.951mil	4.25
7		Int1 (GND)	CF-004	0.689mil	
8		Dielectric 3	S1000-2MB	1.951mil	4.25
9		Dielectric 4	S1000-2MB	1.951mil	4.25
10		Int2 (Sign)	CF-004	1.378mil	
11		Dielectric 5	Core-001-HCC	41.929mil	4.25
12		Int3 (Sign)	CF-004	1.378mil	
13		Dielectric 6	S1000-2MB	1.951mil	4.25
14		Dielectric 7	S1000-2MB	1.951mil	4.25
15		Int4 (PWR)	CF-004	0.689mil	
16		Dielectric 8	S1000-2MB	1.951mil	4.25
17		Dielectric 9	S1000-2MB	1.951mil	4.25
18		Bottom Layer	CF-004	1.378mil	
19		Bottom Surface Finish	Nickel, Gold	0.158mil	
20		Bottom Solder	SM-003	1mil	4
21		Bottom Overlay		0mil	
	Height : 66.741mil				

Bill of Materials

ARRIBADA
Innovation

Project Title: [illegible]
Project File Name: [illegible]
Assembly Variant: [illegible]

[illegible]

[illegible]
[illegible]
[illegible]
[illegible]

Part Number	Description	Reference	Manufacturer	Manufacturer Part Number	Supplier	Supplier Part Number	Supplier Unit Price	Quantity
[illegible]	[illegible]	[illegible]	[illegible]	[illegible]	[illegible]	[illegible]	[illegible]	[illegible]